NG TRADE

SAJA SERIES MULTI ZONE

INSTALLATION MANUAL

R-32 SPLIT TYPE CASSETTE AIR CONDITIONER

MULTIZONE NG SAJA INDOOR CASSETTE MODELS

MISAC3212

PLEASE READ THIS OWNERS MANUAL CAREFULLY AND THOROUGHLY BEFORE OPERATING THE UNIT

TAKE CARE OF THIS MANUAL FOR FUTURE REFERENCE

Contents

Warning 1
Safety Precautions 3
Notices for Usage 5
Notices for Installation 5
Before Installation 6
Installation for Indoor Unit 7
Electrical Connections 13
Testing and Inspection 15
Operation Instructions 16
Maintenance Notice 17

Note:

- ***All the illustrations in this manual are for explanation purpose only.***
- ***Your air conditioner may be slightly different. The actual shape shall prevail.***
- ***They are subject to change without notice for future improvement.***

Warning

NOTE：FCC and IC related content only applies to models with WiFi function.

※ FCC WARNING

WARNING: Changes or modifications to this unit not expressly approved by the party responsible for compliance could void the user's authority to operate the equipment.

※ FCC STATEMENT

This device complies with Part 15 of the FCC Rules. Operation is subject to the following two conditions:
(1) this device may not cause harmful interference, and (2) this device must accept any interference received, including interference that may cause undesired operation.
NOTE: This equipment has been tested and found to comply with the limits for a Class B digital device, pursuant to part 15 of the FCC Rules. These limits are designed to provide reasonable protection against harmful interference in a residential installation. This equipment generates, uses and can radiate radio frequency energy and, if not installed and used in accordance with the instructions, may cause harmful interference to radio communications. However, there is no guarantee that interference will not occur in a particular installation. If this equipment does cause harmful interference to radio or television reception, which can be determined by turning the equipment off and on, the user is encouraged to try to correct the interference by one or more of the following measures:

- Reorient or relocate the receiving antenna.
- Increase the separation between the equipment and receiver.
- Connect the equipment into an outlet on a circuit different from that to which the receiver is connected.
- Consult the dealer or an experienced radio/TV technician for help.

※ IC STATEMENT

This device complies with Industry Canada licenceexempt RSS standard(s).
Operation is subject to the following two conditions: (1) this device may not cause interference, and (2) this device must accept any interference, including interference that may cause undesired operation of the device.
Le présent appareil est conforme aux CNR d'Industrie Canada applicables aux appareils radio exempts de licence.
L'exploitation est autorisée aux deux conditions suivantes : (1) l'appareil ne doit pas produire de brouillage, et (2) l'utilisateur de l'appareil doit accepter tout brouillage radioélectrique subi, même si le brouillage est susceptible d'en compromettre le fonctionnement.

※ IC STATEMENT

This equipment complies with FCC's and IC's RF radiation exposure limits set forth for an uncontrolled environment. The antenna(s) used for this transmitter must be installed and operated to provide a separation distance of at least 7-7/8in.(20cm) from all persons and must not be collocated or operating in conjunction with any other antenna or transmitter. Installers must ensure that 7-7/8in.(20cm) separation distance will be maintained between the device (excluding its handset) and users.
Cet appareil est conforme aux limites d'exposition au rayonnement RF stipulées par la FCC et l'IC pour une utilisation dans un environnement non contrôlé. Les antennes utilisées pour cet émetteur doivent être installées et doivent fonctionner à au moins 7-7/8in.(20cm) de distance des utilisateurs et ne doivent pas être placées près d'autres antennes ou émetteurs ou fonctionner avec ceux-ci. Les installateurs doivent s'assurer qu'une distance de 7-7/8in.(20cm) sépare l'appareil (à l'exception du combiné) des utilisateurs.

Warning

Symbol	Note	Explanation
A2L	WARNING	This symbol shows that this appliance uses a flammable refrigerant. If the refrigerant is leaked and exposed to an external ignition source, there is a risk of fire. (Only for the AC with UL or ETL-MARKING, UL60335-2-40)
	CAUTION	This symbol shows that the operation manual should be read carefully.
	CAUTION	This symbol shows that a service personnel should be handling this equipment with reference to the installation manual.
	CAUTION	This symbol shows that information is available such as the operating manual or installation manual.

NOTE:
The Air conditioner with R32 refrigerant, if roughly treated, may cause serious harm to the human body or surrounding things.

●The room space and maximum refrigerant charge requirements are shown in the table.
●If ice has formed on the unit, do not use means to accelerate the defrosting process other than those recommended by the manufacturer.
●Do not use any cleaners on the unit other than what's approved by the manufacture.
●Do not pierce or burn air conditioner and ensure that the refrigerant pipeline is not damaged.
●The appliance must be stored in a room without continuously operating ignition sources (for example: open flames, an operating gas appliance or an operating electric heater).
●Notice that the refrigerant may be odorless.
●The storage of the air conditioner should be in a location that's able to prevent unintentional damage to the unit.
●Be sure to follow all local codes and safety requirements.

Room Space and Maximum Refrigerant Charge Requirements

Refrigerant Type	Allowable Refrigerant Charge Amount, (oz(kg))	Min. Floor Area For Installation, (ft^2(m^2))
R32	< 64.9 (< 1.84)	75.35 (7)
	64.9~82.54 (1.84~2.34)	96.88 (9)
	82.58~100.18 (2.341~2.84)	113.02 (10.5)
	100.21~117.82 (2.841~3.34)	134.55 (12.5)
	117.85~135.45 (3.341~3.84)	150.69 (14)
	135.49~153.09 (3.841~4.34)	193.75 (18)

Safety Precautions

Incorrect installation or operation by not following these instructions may cause harm or damage to people, properties, etc. The seriousness is classified by the following indications:

⚠ WARNING

This symbol indicates the possibility of death or serious injury.

⚠ CAUTION

This symbol indicates the possibility of injury or damage to properties.

Things you shouldn't do.

Follow the instructions.

Cut the power off.

Environmental notices.

⚠ WARNING

- **Don't** connect the ground wire to the gas pipeline, water pipeline, lightning rod, or telephone earth wire.
- **Don't** pull the power cable .Pulling the power cable could result in damage to the unit and electrical shock.
- **Don't** cut off main power switch during operating or with wet hands.It may cause electric shock.
- **Don't** let the air conditioner blow against the heater appliance. Otherwise it will lead to incomplete combustion, thus causing poisoning.
- **Don't** let the remote control and the indoor unit watered or being too wet. Exposure to excessive moisture may cause damage to the unit and or electrical shock.
- **Don't** install the air conditioner in a place where there is flammable gas or liquid unless the distance is equal to or greater than 3-1/4ft.(1m) apart.
- **Don't** use any unapproved liquid or cleaning agent to clean the air conditioner.
- **Don't** attempt to repair the air conditioner by yourself. Incorrect repairs may cause fire or explosion. Contact a qualified service technician for all service requirement.
- **Don't** operate the air conditioner during a lightning storm. The power should be switched off to prevent danger or injury.
- **Don't** put hands or any objects into the air inlets or outlets.This may cause personal injury or damage to the unit.
- **Don't** block air inlet or air outlet.Otherwise, the cooling or heating capacity will be diminished, or cause the system to stop operating.

⚠ WARNING

- **This** appliance is not intended for use by persons (including children) with reduced physical, sensory or mental capabilities, or lack of experience and knowledge, unless they have been given supervision or instruction concerning use of the appliance by a person responsible for their safety.
- **Children** should be supervised to ensure that they do not play with the appliance.
- **Please** mount the system on a secure surface to prevent the unit from falling and causing injury or damage.
- **The** appliance shall be installed in accordance with national wiring regulations.
- **If** the supply cord is damaged, it must be replaced by the manufacturer, its service agent or similarly qualified persons in order to avoid a hazard.
- **Contact** a qualified service technician for all service requirements.
- **The** air conditioner must be grounded. Incomplete grounding may result in electric shocks.
- **Make sure** that the system has its own dedicated electrical circuit and that all electrical work is conducted by an individual that is certified or licensed to do such work in the state or region in which the insulation is taking place.
- **Ensure** the following objects are not under the indoor unit: Microwaves, ovens and other hot objects.
  Computers and other high electrostatic appliances.
  Electrical sockets. Items susceptible to water damage.
- **The** piping between indoor and outdoor unit shall not be reused, unless they can be properly flushed and re-flared.
- **The** specifications for electrical requirements are listed on the data plate of the unit.

⚠ WARNING

- **Always** switch off the device and cut the power supply when the unit is not in use for long time so as to ensure safety.
- **Always** switch off the device and cut the power supply before performing any maintenance or cleaning. Otherwise, it may cause electric shock or damage.
- **WARNING** RISK OF ELECTRIC SHOCK. CAN CAUSE INJURY OR DEATH: System contains oversize protective earthing (grounding) terminal which shall be properly connected.
- **WARNING** RISK OF ELECTRIC SHOCK. CAN CAUSE INJURY OR DEATH: System contains two independent protective earthing (grounding) terminals which both shall be properly connected and secured.

Safety Precautions

⚠ WARNING

This product contains fluorinated greenhouse gases.

- **Refrigerant** leakage will contribute to climate change.
- **Never** tamper with the refrigerant system or attempt repair without proper training and compliance to local and national codes.
- **The** refrigerant in this system has a lower global warming potential (GWP) than a refrigerant with higher GWP, if leaked to the atmosphere. This appliance contains a refrigerant fluid with a GWP equal to [675]. This means that if 35 oz (1kg) of this refrigerant fluid would be leaked to the atmosphere, the impact on global warming would be [675] times higher than 35 oz (1kg) of CO_2, over a period of 100 years.

⚠ CAUTION

- **Don't** operate the system with windows or doors open. Doing so will limit the system effectiveness.
- **Don't** stand on the top of the outdoor unit or place heavy objects on it. This could cause personal injuries or damage to the unit.

Don't use the system for other purposes, such as drying clothes, preserving foods, etc.

- **Don’t** apply the cold air to the body for a long time. It will deteriorate your physical conditions and cause health problems.

⚠ CAUTION

- **Appropriate** adjustments of the setting temperature can prevent the waste of electricity.
- **Use** an all-pole disconnection type breaker with at least 1/8 in. (3mm) between the contact point gaps that provide full disconnection under overvoltage category III.
- **If** your air conditioner is permanently connected to the fixed wiring, a residual current device (RCD) having rated residual operating current not exceeding 30 mA should be installed in the fixed wiring.
- **The** power supply circuit should have leakage protector and air switch of which the capacity should be more than1.5 times of the maximum current.
- **Regarding** the installation of the air conditioners, please refer to the below paragraphs in this manual.

E-Waste

Meaning of crossed out wheeled dustbin:

Do not dispose of electrical appliances as unsorted municipal waste, use separate collection facilities.

Contact you local government for information regarding the collection systems available.

If electrical appliances are disposed of in landfills or dumps, hazardous substances can leak into the groundwater and get into the food chain, damaging your health and well-being. When replacing old appliances with new ones, the retailer is legally obligated to take back your old appliance for disposals at least free of charge.

Notices for Usage

Operating Range

●Operating the unit outside the recommended temperature range may have an impact on the system performance.
When the temperature is too high, the air conditioner may trip the circuit breaker causing the air conditioner to shut down.
When the temperature is too low, the outdoor heat exchanger may generate excessive moisture, leading to water dripping from the unit.
●In long-term cooling or dehumidification with a relative humidity of above 80%, doors and windows should be closed to prevent the indoor unit from generating too much water and causing leaks.

Range	Indoor	Outdoor
Cooling	60.8~89.6°F (16~32°C)	-13~125.6°F (-25~52°C)
Heating	50~89.6°F (10~32°C)	-13~75.2°F (-25~24°C)

Notes for Heating

●The fan of the indoor unit will not start immediately when the heating cycle has started. The unit will warm up and then start blowing air to avoid blowing out cool air.
●When it is cold and wet outside, the outdoor unit will develop frost over the heat exchanger which over time will cause the system to start the defrost function.
●During defrost, the air conditioner will stop heating for about 5-12 minutes.
●Vapor may come out from the outdoor unit during defrost. This is not a malfunction, but a result of fast defrost.
●Heating will resume after defrost is complete.

Notes for Turning Off

●When the air conditioner is turned off, the main controller will automatically decide whether to stop immediately or after running for dozens of seconds with lower frequency and lower air speed.

Notices for Installation

Important Notices

●This unit must be installed by a certified contractor to avoid:
Damage to the unit.
Refrigerant leaking in the atmosphere.
Electrical shock.
Burns from refrigerant.
Other serious injuries including death.
●Leak test must be made after installation.
●To move and install air conditioner to another place, please contact our local authorized contractor.

Installation Environment Inspections

●Check nameplate of outdoor machine to make sure whether the refrigerant is R32.
●Check the floor space of the room. The space shall not be less than usable space in the specification.
●The outdoor unit shall be installed at a well-ventilated place.
●Check the surrounding environment of installation site: R32 shall not be installed in the enclosed reserved space of a building.
●When using electric drill to make holes in the wall, check first whether there is pre-buried pipeline for water, electricity and gas. It is suggested to use the reserved hole in the roof of the wall.

Unpacking Inspections

●Open the box and check air conditioner in area with good ventilation and without ignition source.
●Note: Operators are required to wear anti-static devices.
● It is necessary to check whether there is refrigerant leakage before opening the box of outdoor machine; stop installing the air conditioner if leakage is found.
●Fire prevention equipment should be prepared before starting the installation.
●Then check the refrigerant pipeline to see if there is any damage or leaks.

Safety Principles for Installing Air Conditioner

●Fire prevention device shall be prepared before installation.
●Keep installing site ventilated.(open the door and window)
●Do not allow any ignition sources, smoking, or phone calls in areas where R32 refrigerant is present.
●Anti-static precautions in necessary for installing air conditioner, e.g. wear pure cotton clothes and gloves.
●Ensure the leak detector is operational during the installation.
●If R32 refrigerant leakage occurs during the installation, you shall immediately detect the concentration in indoor environment until it reaches a safe level.
●If refrigerant leakage affects the performance of the air conditioner, please immediately stop the operation, and the air conditioner must be vacuumed firstly and be returned to the maintenance station for processing.
●Keep electric appliance, power switch, plug, socket, high temperature heat source and high static away from the area underneath sidelines of the indoor unit.
●The air conditioner shall be installed in an accessible location for installation and maintenance, without obstacles that may block air inlets or outlets of indoor /outdoor units. It shall be kept away from heat source, inflammable or explosive conditions as well.
●When installing or repairing the air conditioner and the connecting line is not long enough, the entire connecting line shall be replaced with the connecting line of the original specification; extension is not allowed.
●When installing an R32 HVAC system, it's crucial to ensure that the installation site meets specific safety requirements due to the flammable nature of R32 refrigerant.

Notices for Installation

Requirements for Installation Position

●Avoid places of flammable or explosive gas leakage or where there is poor ventilation.
●Avoid places subject to strong electric/magnetic fields like microwaves and fluorescent lights.
●Avoid places like subject to noise and resonance like walls above a sleeping area.
●Avoid severe natural conditions (e.g. strong wind, direct sunshine or high temperature heat sources).
●Avoid places within the reach of children.
●Shorten the connection between the indoor and outdoor units as much as possible for best performance.
●Select a location where it is easy to perform service and repair.
●The outdoor unit shall not be installed in any way that could occupy an aisle, stairway, exit, fire escape, catwalk or any other public area.
●The outdoor unit shall be installed as far as possible from the doors and windows of the neighbors as well as plants.

Requirements of the Mounting Structure

●The mounting rack must meet the relevant national or industrial standards.
●It is recommended that the mounting rack and its load carry surface shall be able to withstand 4 times or above the weight of the unit.
●The mounting rack of the outdoor unit shall be fastened with expansion bolts or as recommended by the manufacturer.
●Ensure the secure installation regardless of what type of wall on which it is installed, to prevent potential dropping that could cause damage or injury.

Requirements for Operations at Raised Height

●When carrying out installation at 6-9/16ft. (2m) or higher above the base level, safety belts must be worn and ropes of sufficient strength must be securely fastened to the outdoor unit to prevent falling that could cause personal injury or death as well as property loss.

Grounding Requirements

●Be sure to properly ground the unit. Follow all local and national codes as applicable.
●Do not connect the grounding wire to a gas pipe, water pipe, lightning rod, telephone line, or a circuit poorly grounded to the earth.
●The grounding wire is specially designed and shall not be used for other purpose, nor shall it be fastened with a common tapping screw.
●Ensure that all electrical connects are securely fasted and connected to the correct terminals.
●Local and national electrical codes must be utilized.

Others

●The connection method of the air conditioner and the power cable and the interconnection method of each independent element shall be subject to the wiring diagram affixed to the machine.
●The model and rating value of the fuse should match the information printed on the silkscreen of the corresponding controller or the fuse sleeve. This ensures that the fuse is correctly rated for the specific application, providing proper protection and functionality.

Before Installation

Accessories

The air conditioning system comes with the following accessories. Use all of the installation parts and accessories to install the air conditioner. Improper installation may result in water leakage, electrical shock and fire, or equipment failure.

Installation Fittings		
Name	**Shape**	**Quantity**
Installation and owner's manual(this book)		1
Metal clamp		2
Drain hose		1
Cable ties		8

Name	Shape	Quantity
Insulation for fitting (for liquid pipe)	Thin	1
Insulation for fitting (for gas pipe)	Thick	1
Sealing pad		1
Sodium cupric seed (Large/Small)		2

Indoor Unit Installation

Attention to Installation Site of Indoor Unit

For convenience of maintenance , please reserve a service port. Ensure the following conditions are satisfied and confirm the position with the customer.

1.The position must allow the air to not be obstructed.
2.The distance away from the wall and obstacles is shown in the drawing below.
3.The installation site should be convenient for water draining (See "Installation of drainage pipe" T for details).
4.For ducted type indoor unit , the suspension site should be able to support the weight 4 times greater than the indoor unit. There should be no increase in noise and vibration. If it needs to be reinforced , the installation should be carried on after reinforcement (if reinforcement is weak, the indoor unit will fall and cause damage).
5.The indoor unit must be away from sources of heat or steam and way from entrances.
6.The indoor unit position is near the power source (special line).
7.The indoor unit position must allow for easy connection to the outdoor unit.
8.The indoor unit position should keep away from direct sunlight and moisture.
9.The height inside the ceiling should reach the drainage requirements to ensure the installation of indoor unit.
10.The unit can not be installed in the wash house (it will cause electric shock).
11.In the inlet and outlet of indoor unit , protective barriers should be installed to prevent finger from inserting or contacting the fan with highspeed and metal fin.

Must carryout a full inspection to the following place before installation

1.In restaurants and kitchens, ensure the kitchen extract fan and hood can effectively exhaust oil, steam, flour, and other by-products. Position the indoor unit away from cooking areas to avoid contamination. Regularly clean and maintain the indoor fan, heat exchanger, and drain pump. Use high-quality filters to trap fine particles and ensure all ducts and connections are sealed and insulated. These measures will help maintain performance and reduce the risk of failures.
2.When installing the unit in a factory, ensure it is situated in a place where it will not be contaminated by oil, powder, iron filings or dust.
3.Do not install near potential sources of combustible gas.
4.Do not install where acidic or corrosive gases are present.

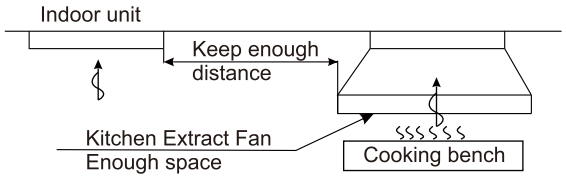

Select Installation Site

To ensure ease of maintenance please allow the space shown below for access to the unit

Unit:in(mm)

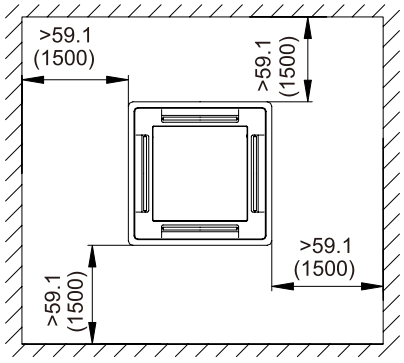

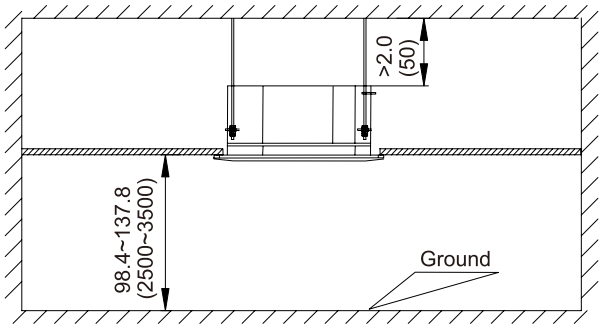

Ensure the following conditions are satisfied and confirm the position with the customer.

1.There are no obstacles to hinder air circulation. The air should be able to reach every part of the room.
2.The distance away from the ceiling and obstacles is shown in the below drawing.

Unit:in(mm)

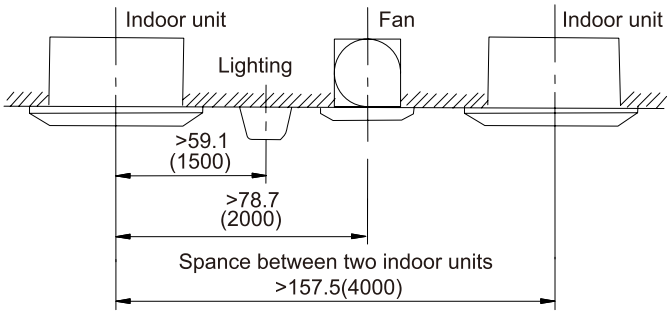

Indoor Unit Installation

Paper Pattern for Installation

●To ensure proper installation, match the installation pattern paper to the ceiling opening dimensions. For the height of the ceiling's lower surface from the floor level, confirm the measurements with clearance requirements.
●The center of the ceiling opening is shown in the installation pattern paper. The center of the indoor unit is indicated as triangle marks on the sides and bottom of the unit and those on the installation pattern paper.
●Put the installation pattern paper to the indoor unit with the triangle marks on the indoor unit and those on the installation pattern paper aligned using the four screws.

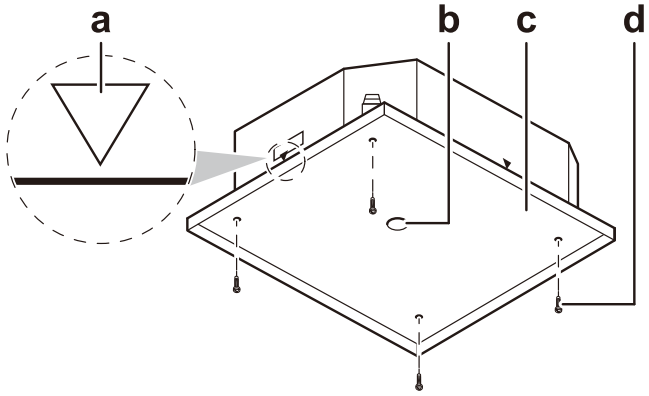

a:Centre of the unit / Centre mark of the unit
b:Centre of the ceiling opening
c:Paper pattern for installation (upper part of the packing)
d:Screws (accessories)

Ceiling Opening and Unit

Ceiling cassette split air conditioner unit has two kinds of shapes.
Please choose the size according to the shape. The actual shape shall prevail.

Unit:in(mm)

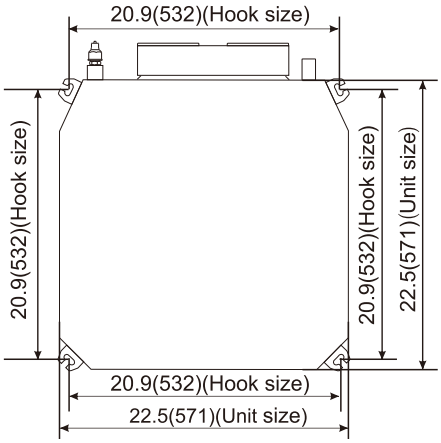

09K/12K/18K

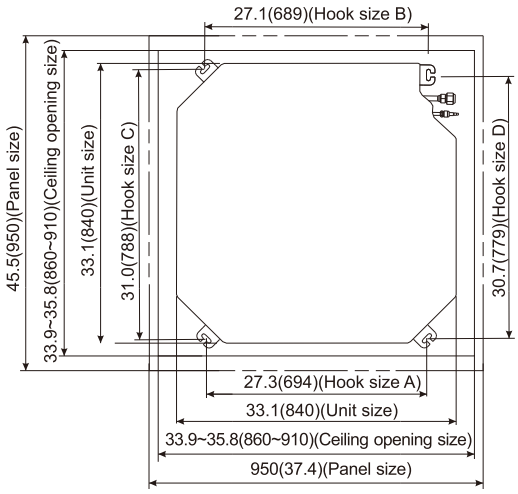

24K

Make sure the ceiling opening is within the following limits:

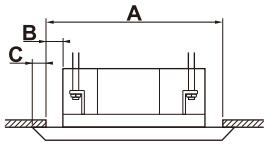

IfA	ThenB	ThenC
22.5 in(571 mm)	0.4 in(10 mm)	1.18 in(30 mm)
33.9 in(860 mm)	0.4 in(10 mm)	1.8 in(45 mm)
35.8 in(910 mm)	1.4 in(35 mm)	0.8 in(20 mm)

A: Ceiling opening
B: Distance between the unit and the ceiling opening
C: Overlap between the decoration panel and the suspended ceiling

Suspension foundation of the Indoor Unit

1. Suspension support structure for the indoor unit
The suspension foundation is a structure of either wooden frame or reinforced concrete. It must be firm and reliable to bear the weight of more than 440LB(200kg) and capable of bearing vibration for long periods.
2. Fixing of suspension foundation
Fix the suspension bolts either as shown in the following figure or by a steel or wooden bracket. If this unit is installed on a sloping ceiling, a cushion block should be installed between the ceiling and the air outlet panel, in order to ensure that the unit is installed on a level surface.

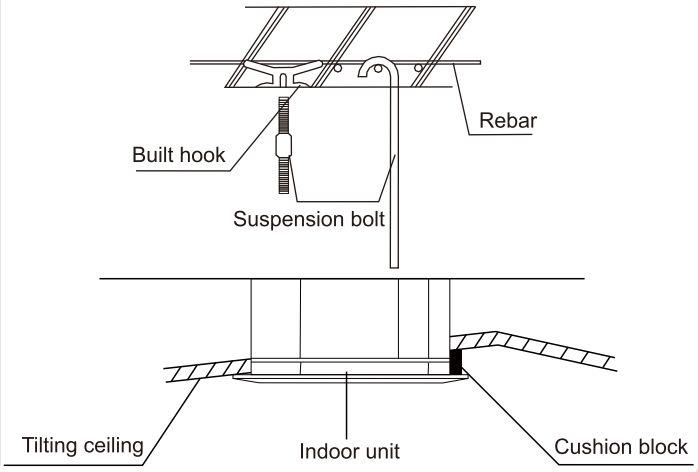

Indoor Unit Installation

3.Suspension bolts

●Use M8~M10 suspension bolts for installation. Attach the hanger bracket to the suspension bolt.

●Fix it securely using a nut and washer from the upper and lower sides of the hanger bracket.

●After the unit is installed ensure it is secure and does not shake or sway.

●Ensure that the center of the indoor unit is in alignment with the center of the opening in the ceiling.

Unit:in(mm)

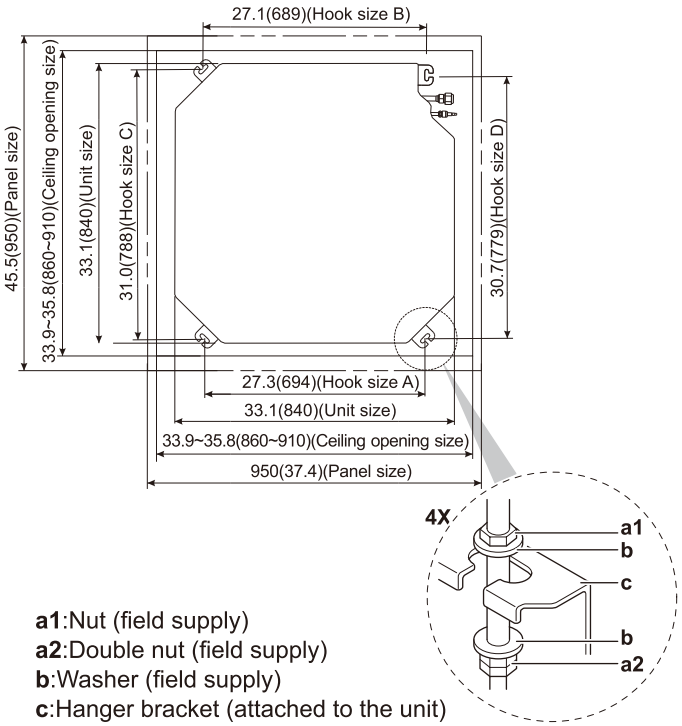

a1:Nut (field supply)
a2:Double nut (field supply)
b:Washer (field supply)
c:Hanger bracket (attached to the unit)

●Cassette unit with external electrical control box, installation refers to figure.

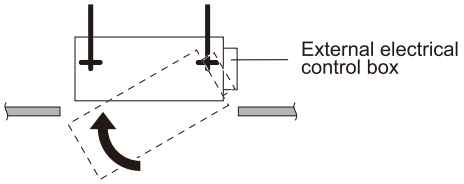

Make sure the unit is level at all 4 corners using a level or a water-filled vinyl tube.

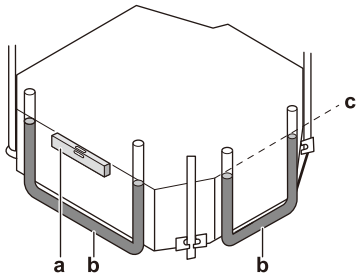

a: Levela
b: Vinyl tube
c: Water level

Installation of Drainage Pipe

1.The drain pipe should be properly insulated to prevent the generation of condensation.
It should be installed with a downward gradient.

Unit:ft(m)

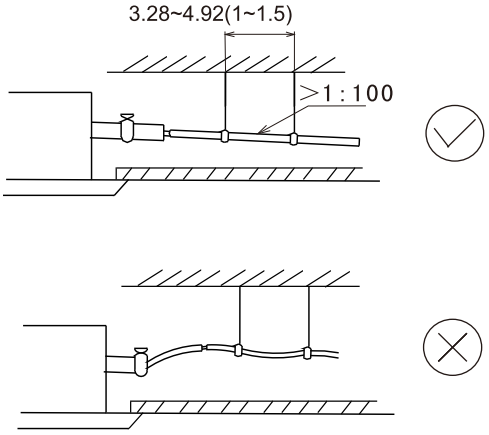

⚠ CAUTION

In order to ensure the drainage water comes out successfully, the unit must be horizontal or declined to drain hose when finished installation.

2.The unit's drain pump can lift water up to 47.2 in(1200 mm). However, once the pump stops, any remaining water in the pipe may drain back and potentially overflow the drain tray, leading to a water leak. To prevent this, please install the drain pipe according to the provided diagram.

Unit:ft(m)

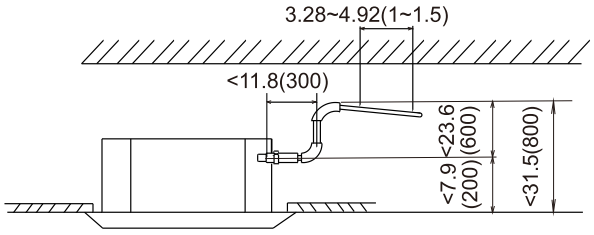

3.When draining multiple units into a common drain line, this common drain should be installed about 3.9in(100mm) below each units drain outlet, as shown in the following figure.

Unit:in(mm)

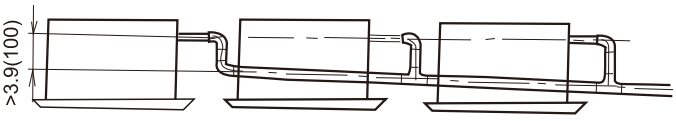

Indoor Unit Installation

Connect the Drain Piping to the Indoor Unit

1.Push the drain hose as far as possible over the drain pipe connection.
2.Check for water leaks.
3.Install the insulation piece (drain pipe).
4.Strap the large sealing pad (= insulation) around the metal clamp and drain hose, and fix it with tie wraps.
5.Connect the drain piping to the drain hose.

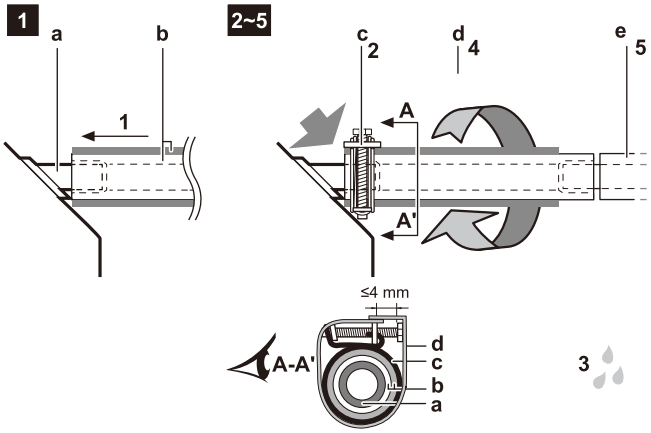

a:Drain pipe connection (attached to the unit)
b:Drain hose (accessory)
c:Metal clamp (accessory)
d:Large sealing pad (accessory)
e:Drain piping (field supply)

To Check for Water Leaks

The procedure differs depending on whether electrical wiring is already finished. When electrical wiring is not finished yet, you need to temporarily connect the user interface and supply power to the unit.

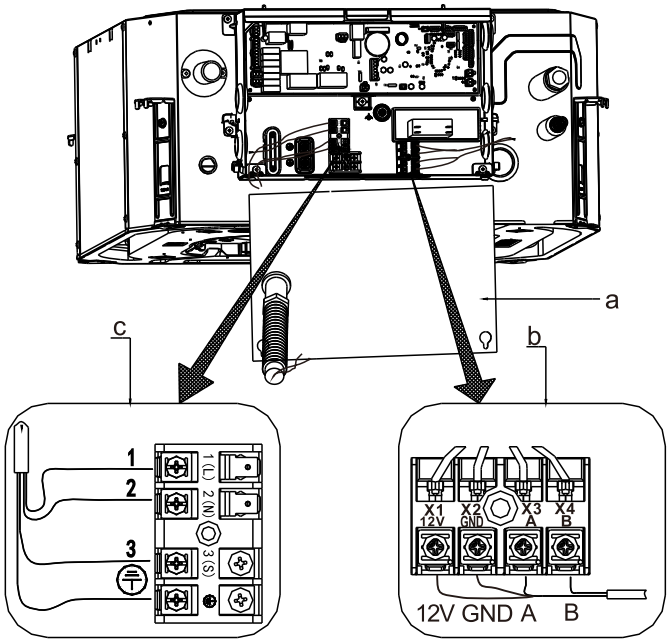

09K/12K/18K

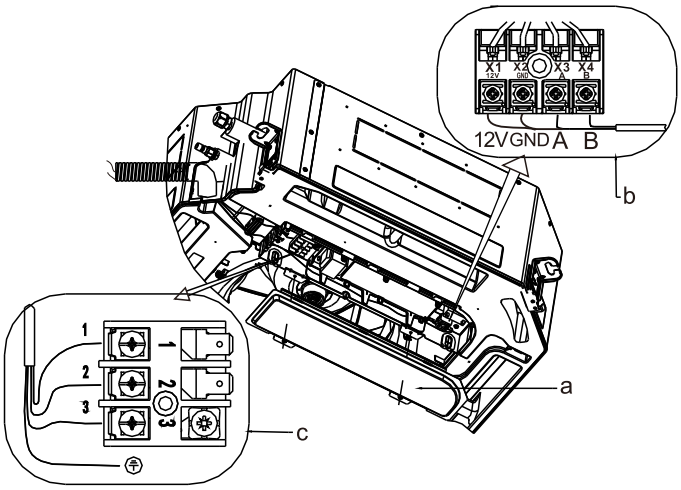

24K

When electrical wiring is not finished yet

1.Temporarily connect electrical wiring.
●Remove the switch box cover (a).
●Connect the user interface (b).
●Connect the power supply and ground ©.
●Reattach the switch box cover (a).
2.Turn ON the power.
3.Start cooling operation.
4.Gradually pour approximately 33oz (1L) of water through the air discharge outlet, and check for leaks.
5.Turn OFF the power.
6.Disconnect the electrical wiring.
●Remove the switch box cover.
●Disconnect the power supply and ground.
●Disconnect the user interface.
●Reattach the switch box cover.

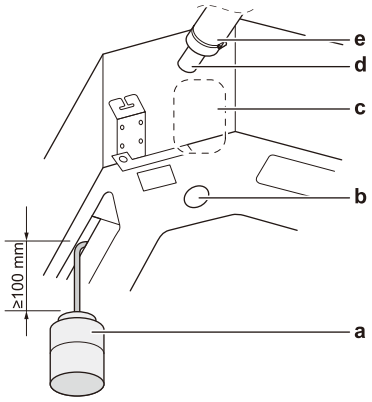

a :Plastic watering can
b :Service drain outlet (with rubber plug).
Use this outlet to drain water from the drain pan.
c :Drain pump location
d :Drain pipe connection
e :Drain pipe

When electrical wiring is finished already

1.Start cooling operation
2.Gradually pour approximately 33oz (1L) of water through the air discharge outlet, and check for leaks

Indoor Unit Installation

Grille Installation

Align the panel with the four bolt holes of the inner machine, then tighten the retaining bolts in a diagonally crossed sequence.

Note: When installing, ensure that the position of the louver motor on the panel is consistent with that of the refrigerant tube.

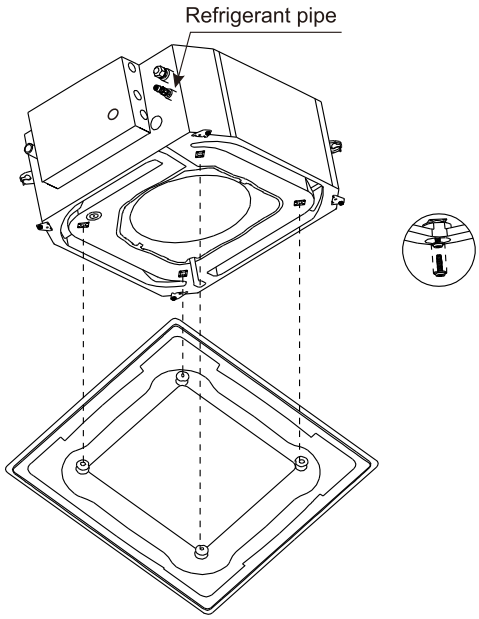

09K/12K/18K

The grille has four clips which attach to corresponding hangers on the unit and the grille should be positioned using these first. The grille is then fixed into position by four bolts which are accessed through the four corner panels on the grille.
The four connection bolts are located inside the inlet panel of the grille.

Note: During installation please ensure that the air louver motor in the grille corresponds to the position of the refrigerant pipe entry into the indoor unit.

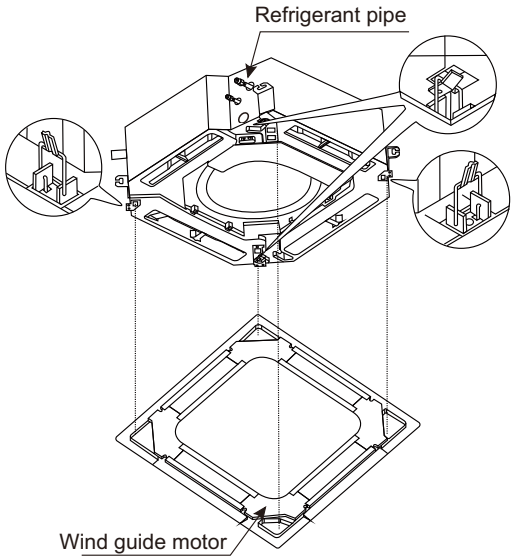

24K

Removing the Air FIter

1.Ensure the unit is switched off and the power is off.
2.Each unit has two retention clips on the grille. These must be pressed and then pushed to the open position.
3.The filter access panel may now be lowered allowing you to remove the filter from its four retaining clips.
4.Ensure the filter is fully clean and dry before replacing.
5.Ensure the retention clips on the grille are fastened position after replacing the filter.

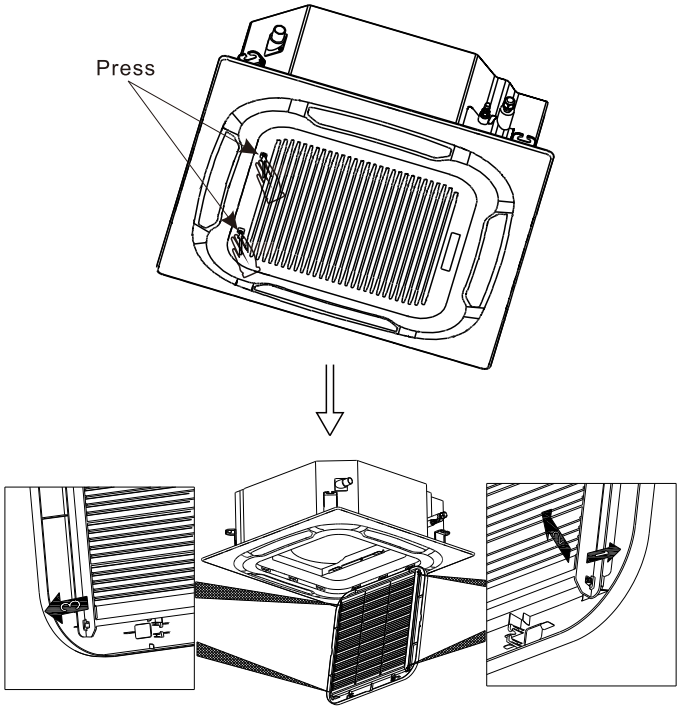

Piping Works and Flaring Techniques

●Do not use contaminated or damaged copper tubing.
If the evaporator, condenser, or any piping has been open and exposed to the atmosphere for 15 seconds or more, the system must be vacuumed. Do not remove plastic plugs or brass nuts from piping connections until the connections are ready to be made.

●If any brazing work is required, ensure that a nitrogen gas purge is utilized to prevent soot formation on the inside wall of copper tubing. Failure to do so may cause damage to the unit and void warranty.

●Cut the pipe as straight as possible (See Fig 1.).
Make sure to use a deburring tool to remove any burrs.
Hold the pipe with opening facing down to prevent metal chips from entering the pipe（See Fig2.).

●This will avoid unevenness on the flare faces which will cause gas leak.

●Insert the flare nuts, mounted on the connection parts of both the indoor unit and outdoor unit, into the copper pipes.

●The exact length of pipe protruding from the top surface of the swaging block is determined by the flaring tool. (See Fig 3.).

●Fix the pipe firmly on the swaging block. Match the centers of both the swaging block and the flaring punch, then tighten the flaring punch fully.

●The refrigerant pipe connections should be insulated to maintain temperature and prevent condensation, ensuring the system runs efficiently.

Indoor Unit Installation

Fig 1.

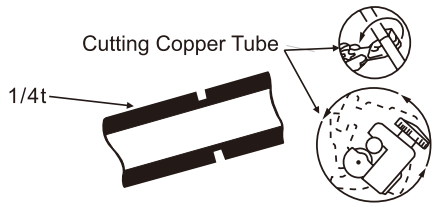

Fig 2.

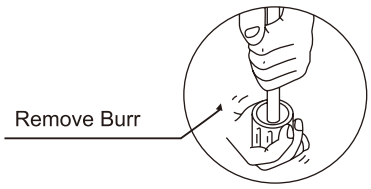

Fig 3.

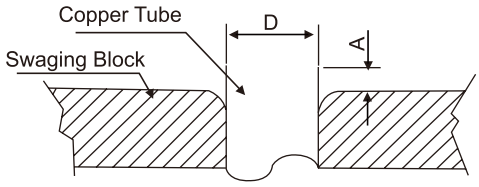

Ø Tube, D	A(Inch/mm)		
Inch	mm	Imperial(Wing-nut Type)	Rigid (Clutch Type)
1/4"	6.35	0.051" (1.3)	0.028" (0.7)
3/8"	9.52	0.063" (1.6)	0.039" (1.0)
1/2"	12.70	0.075" (1.9)	0.051" (1.3)
5/8"	15.88	0.087" (2.2)	0.067" (1.7)
3/4"	19.05	0.098" (2.5)	0.079" (2.0)

Install the Connection Pipe

Connect the pipe to the unit

Align the center of the piping and tighten the flare nut sufficiently with fingers(See Fig 4.).

Finally, tighten the flare nut with torque wrench until the wrench clicks.

When tightening the flare nut with the torque wrench, ensure that the tightening direction follows the arrow indicated on the wrench.

Tightening torque table

The size of pipe ,in(mm)	Torque,ft-lb(N·m)
Ø1/4″ (Ø6.35)	11.0-18.4 (15-25)
Ø3/8″ (Ø9.52)	25.8-29.5 (35-40)
Ø1/2″ (Ø12.7)	33.2-44.3 (45-60)
Ø5/8″ (Ø15.88)	53.9-57.6 (73-78)
Ø3/4″ (Ø19.05)	55.3-59.0 (75-80)

Fig 4.

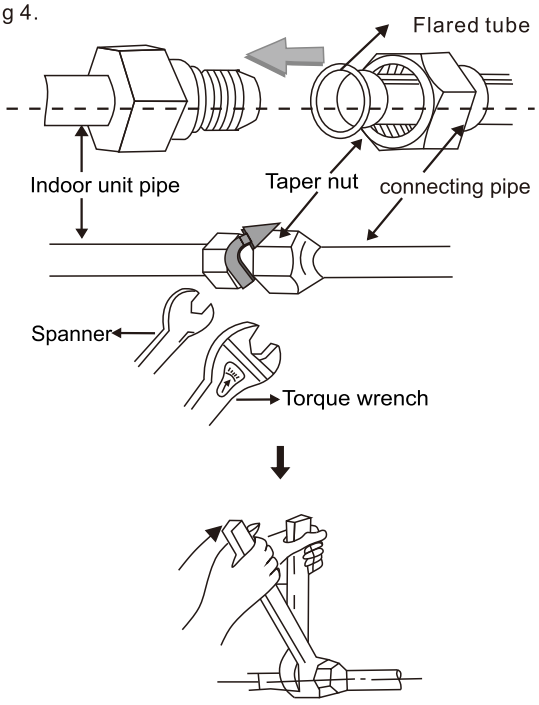

Installation of Tubing

A :Gas piping B :Liquid piping
a :Insulation material (field supply)
b :Tie wrap (accessory)
c :Insulation pieces: Large (gas pipe), small (liquid pipe) (accessories)
d :Flare nut (attached to the unit)
e :Refrigerant pipe connection (attached to the unit)
f :Unit
g :Sealing pads: (gas pipe), (liquid pipe) (accessories)
1 :Turn up the seams of the insulation pieces.
2 :Attach to the base of the unit.
3 :Tighten the tie wraps on the insulation pieces.
4 :Wrap the sealing pad from the base of the unit to the top of the flare nut.

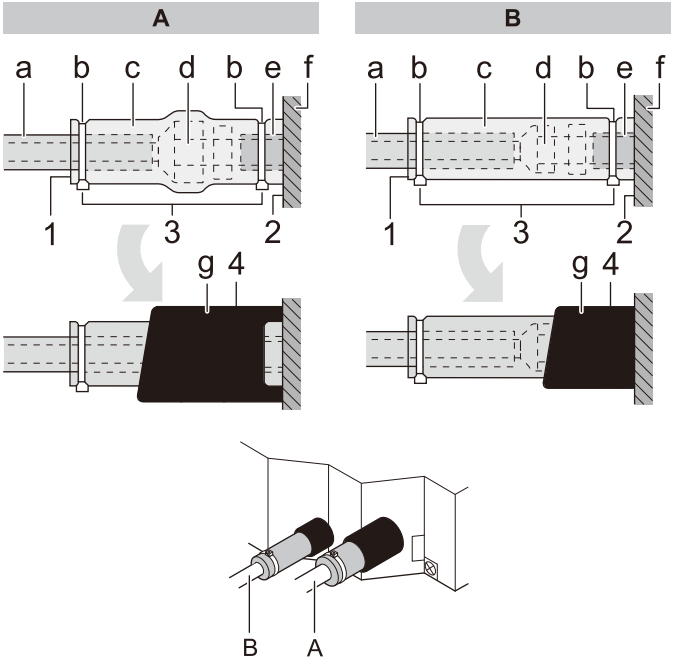

Electrical Connections

Electrical Safety Requirements

●Be sure to use the correct rated voltage for the air conditioner and a dedicated circuit for the power supply.
●All wires must be sized per NEC (National Electrical Code) and local codes.
●The operating range is 90%-110% of the local rated voltage. Insufficient power supply causes malfunction, electrical shock, or fire. If the voltage instability occurs, install the voltage regulator.
●The minimum clearance between the air conditioner and the combustibles is 4.92ft (1.5m) or greater.
●Use the correct wire size and type for connecting the indoor unit to the outdoor unit.
●The size of the interconnection cord, power cable, fuse, and switch needed is determined by the maximum current of unit.
●The maximum current is indicated on the nameplate located on the side panel of the unit. Refer to this nameplate to choose the right wire size, breaker, or switch.

⚠ WARNING

●All electrical works must be carried out&checked by a qualified electrician and must adhere to the IET regulations, local and national legislation and industry best practice. The system must have its own independent power supply.
●Do not attempt any electrical work yourself.
●An Earth Leakage Protector, Power Switch and Circuit Breaker or Fuse must be installed in the dedicated power supply or there is the risk of electric shock.
●The grounding must be reliable. If grounding is not correct, it may lead to electric shock.
●All power cables should be properly secured with cable ties so that external forces can not disconnect the wire from the terminals. Improper connections or insecure fastening can cause electric shocks or fire.
●use a circuit breaker that disconnects all electrical connections (both live and neutral wires) and has a gap of at least 1/8 in (3 mm) between the contact points. This ensures complete disconnection in high voltage situations.

⚠ CAUTION

●Do not connect the ground cable to gas or water pipes, telephone lines, lightning rods, or the ground cables of other products. This is crucial for safety and to prevent electrical hazards.
●Once the indoor and outdoor units are switched on, do not cut off the power supply within the first minute. The system needs this time to automatically set itself up, and interrupting the power could cause it to operate abnormally.
●Please connect the power cord and interconnecting cable according to the wiring diagram.
●Connect the wire firmly to the terminal block using crimps and secure in order to prevent external forces puling on the wire causing risk of fire or electric shock.
●After completing the electrical connections, ensure that all wires are kept away from other components like tubing and the compressor. This helps prevent potential damage and ensures safe operation.

⚠ NOTE

●The definition of power cord is the power supply cable from the isolating switch attached to the dedicated power supply to the indoor unit or outdoor unit. Interconnecting cable for the indoor and outdoor unit is the power cable that connects indoor unit and outdoor unit.
●Above-mentioned definitions are the specifications of power supply, power cord and interconnecting cable of indoor unit and outdoor unit of all different types of air conditioners.
●To avoid voltage drops, if the cross-sectional area of a power cable core is at its minimum size and the power cord is lengthened, you should opt for a larger power cable size. This ensures that the electrical system remains efficient and safe.

Selection of Electrical Parts

The wiring cable specification that is needed in the installation:

Model	Power connection line(AWG)	Fuse nominal value (A) (controlling panel)	Certifition Type
09K	18AWG	5A	UL
12k			
18K			
24k			

⚠ CAUTION for WIRING

●The indoor units in the same system can be connected to the power supply from one branch switch. However, selection of branch switch, branch over current circuit breaker and wiring size must be according to applicable legislation.
●For connection to the terminal block, use a ring type crimp style terminals with insulation sleeve or insulate the wirings properly.

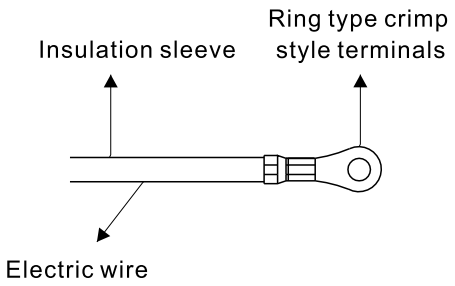

Wiring Connection

1.Remove the service cover.
2.User interface cable:
Route the cable through the frame, connect the cable to the terminal block, and fix the cable with a cable tie, The line passes through the pressing line seat without fixing the pressing line seat.
3.Interconnection cable (indoor↔outdoor):
Route the cable through the frame, connect the cable to the terminal block(make sure the numbers match with the numbers on the outdoor unit, and connect the earth wire), and fix the cable with a cable tie.

Electrical Connections

4.Divide the small sealing (accessory) and wrap it around the cables to prevent water from entering the unit. Seal all gaps to prevent small animals from entering the system.
5.Reattach the service cover.

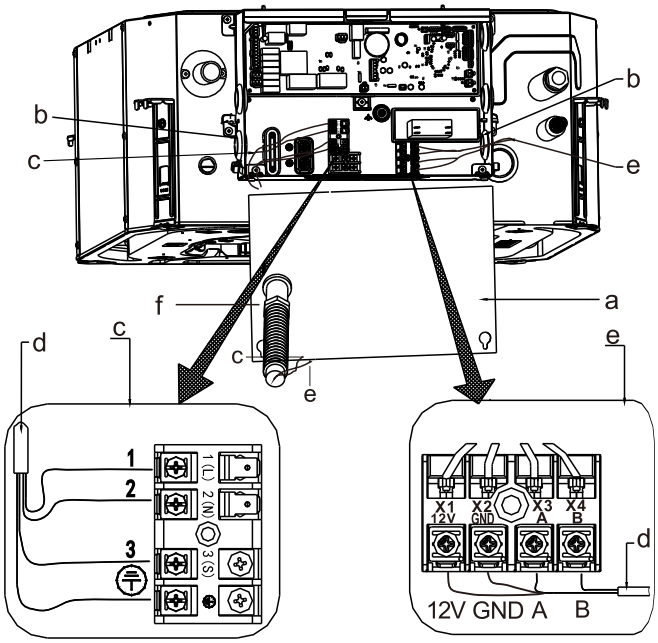

09K/12K/18K

●Use a 90° elbow type of conduit with dimensions (Fig 5.) to prevent it from hitting the swing motor housing of decoration panel.
●Do not dispose the screw which assembles casing and resin together. The screw will be used to install conduit mounting plate. Make sure to install the conduit mounting plate first before wiring.

Fig 5. Unit:in(mm)

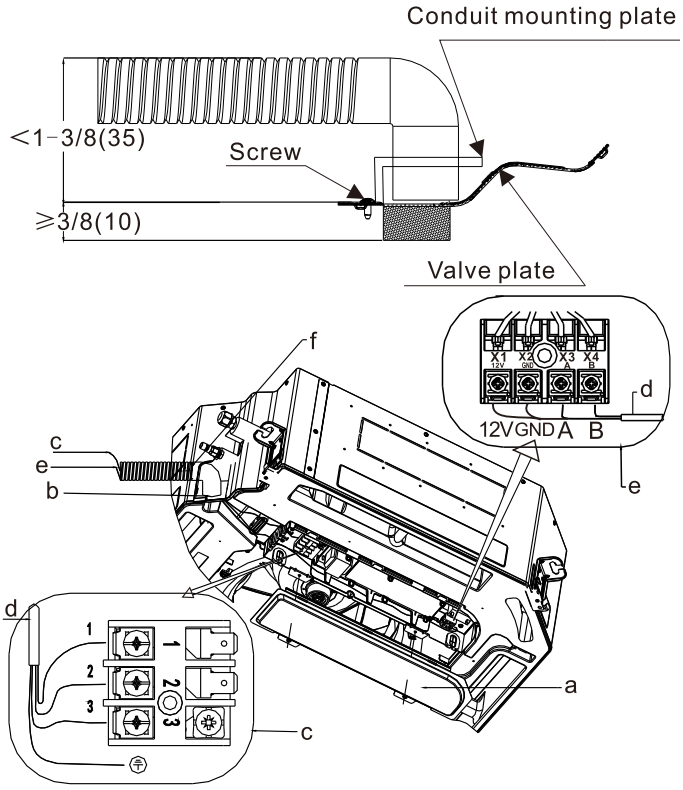

24K

a Service cover (with wiring diagram on the back)
b Opening for cables
c Connection of interconnection cable (including earth)
d Cable tie
e Connection of user interface cable
f Conduit(field suppil)

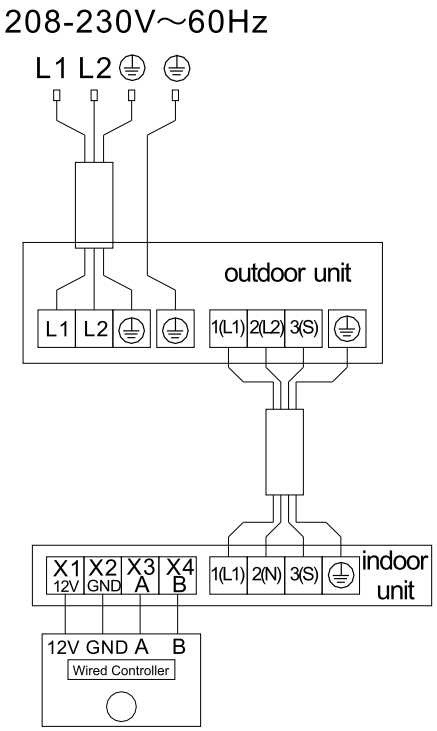

Note:
The PC board of outdoor unit whose power supply has phase sequence protection. Please pay attentions to it while connecting power cable.

Testing and Inspection

Check after Installation

●Electrical Safety Check

1. If the supply voltage is within tolerance.
2. If the indoor and outdoor units are properly wired.
3. If the grounding wire of the air conditioner is securely grounded.

●Installation Safety Check

1.If the unit is mounted properly and securely.
2.If the water drains smoothly from indoor unit to outdoor drain.
3.If the wiring and piping are correctly installed and free of leaks.
4.Check that no foreign matter or tools are left inside the unit.
5.Check the refrigerant pipeline and connections are properly insulated.

●Leak test of the refrigerant

Depending on the installation method, the following methods may be used to check for suspect leak, on areas such as the connections of the outdoor unit and the cores of the cut-off valves and t-valves:
1.Bubble method: Apply of spray a uniform layer of soap water over the suspected leak spot and observe carefully for bubble.
2.Instrument method: Checking for leak by pointing the probe of the leak detector according to the instruction to the suspect points of leak.

Note:
Make sure that the ventilation is good before checking.

Test Operation

●Test Operation preparation:

1. Verify that all piping and wiring is properly connected.
2. Confirm that the valve at the gas side and the liquid-side are fully open.
3. Verify that power is turned on to the unit.
4. Install batteries in the remote control.

Note:
Make sure that the ventilation is good before testing.

●TEST operation method

1.Turn on the power and push the ON/OFF switch button of the remote controller to start the air conditioner.
2.Select COOL or HEAT, adjust the SWING and other operation modes with the remote controller to verify proper operation.

Operation Instructions

Following the instructions below will allow you to get the best from your air conditioner.

Proper Use Method

●During cooling, avoid direct sunshine
Please close the curtains.

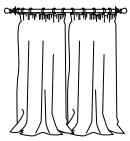

●Do not obstruct airflow
Do not place objects near the air inlet or outlet of either the indoor or outdoor unit.
If the air flow is obstructed then the air conditioner will be unable to perform correctly.

●Try not to cool excessively
Suggestion of setting temperature.
Cooling: 78.8℉-82.4℉(26-28℃)
Dehumidify:68℉-75.2℉(20-24℃)

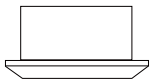

●Do not use other heating equipment when unit run cooling fuction
Avoid using other heating equipment while the unit is running in cooling mode. Using heating equipment simultaneously can interfere with the cooling function and reduce efficiency.

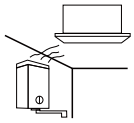

●Keep the windows or doors shut
Open windows or doors will increase the amount of heating or cooling the amount lof heating or cooling required and may prevent the unit being able to preform correctly.

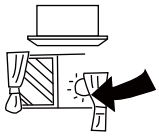

●Clean the air filter regularly
Dirty filters will prevent the unit from being able to perform correctly and may cause expensive damage. Clean regularly by washing or with a vacuum cleaner. Replace if necessary. We recommend filter cleaning once a month or more frequently if required.

⚠ CAUTION

●Before cleaning the air filter stop the unit on the controller and turn off at the power supply.
●Do not clean the air conditioner with water or you risk both electric shock and short circuit.
●When cleaning the air filter ensure you pay attention to health and safety.

Cleaning the Air Filter

In order to ensure the best performance from your air conditioner clean the air filter regularly. We recommend cleaning once a month or more frequently if required.
The filter can be cleaned using a vacuum cleaner or with soap and water.

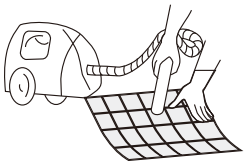

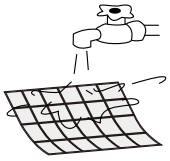

⚠ CAUTION

●Electricity, Dangerous! Cut off all the power supply before maintenance.
●When the filter is very dirty it can be washed in detergent and hot water(below 104℉ (40℃)).
●Ensure the filter is fully dry before reinstallation to avoid risk of electric shock or short circuiting.
●Do not dry the filter using direct sunlight.

Maintenance Notice

Attention :
For maintenance or scrap, please contact a authorized contractor.
Maintenance by unqualified person may cause injury or damage to the unit.
Charge air conditioner with R32 refrigerant only, and maintain the air conditioner in a strict accordance with the manufacturer's requirements.

Qualification of Workers

1. Special training is required to work on equipment with A2L refrigerants. Only rely on qualified contractors to install, service, and repair this system.
2. The maintenance and repair of the air conditioner must be conducted according to the method recommended by the manufacturer.
If other professionals are needed to help maintain and repair the equipment, it should be conducted under the supervision of individuals who have the qualification to repair AC equipped with flammable refrigerants.

Inspection of the Site

Safety inspection must be conducted before maintaining equipment with R32 refrigerant to make sure the risk of fire is minimized.
Check whether the space is well ventilated and whether anti-static or fire prevention equipment is required.
While maintaining the refrigeration system, observe the following precautions before operating the system.

Operating Procedures

1.General work area:
All maintenance staff and others working in the local area shall be instructed on the nature of work being carried out. Work in confined spaces shall be avoided.
2.Checking for presence of refrigerant:
The area shall be checked with an appropriate refrigerant detector prior to and during work, to ensure the technician is aware of potentially toxic or flammable atmospheres. Ensure that the leak detection equipment being used is suitable for use with all applicable refrigerants, i.e. non-sparking, adequately sealed or intrinsically safe.
3.Presence of fire extinguisher:
If any hot work is to be conducted on the refrigerating equipment or any associated parts, appropriate fire extinguishing equipment shall be available to hand. Have a dry powder or CO2 fire extinguisher adjacent to the charging area.
4.No ignition sources:
No person carrying out work in relation to a REFRIGERATING SYSTEM which involves exposing any pipe work shall use any sources of ignition in such a manner that it may lead to the risk of fire or explosion. All possible ignition sources, including cigarette smoking, should be kept sufficiently far away from the site of installation, repairing, removing and disposal, during which refrigerant can possibly be released to the surrounding space. Prior to work taking place, the area around the equipment is to be surveyed to make sure that there are no flammable hazards or ignition risks. “No Smoking” signs shall be displayed.
5.Ventilated Area:
Ensure that the area is in the open or that it is adequately ventilated before breaking into the system or conducting any hot work. A degree of ventilation shall continue during the period that the work is carried out. The ventilation should safely disperse any released refrigerant and preferably expel it externally into the atmosphere.
6.Checks to the refrigeration equipment:
Where electrical components are being changed, they shall be fit for the purpose and to the correct specification. At all times the manufacturer’s maintenance and service guidelines shall be followed. If in doubt, consult the manufacturer’s technical department for assistance.
The following checks shall be applied to installations using FLAMMABLE REFRIGERANTS:
●The actual REFRIGERANT CHARGE is in accordance with the room size within which the refrigerant containing parts are installed;
●The ventilation machinery and outlets are operating adequately and are not obstructed;
●If an indirect refrigerating circuit is being used, the secondary circuit shall be checked for the presence of refrigerant;
●Marking to the equipment continues to be visible and legible. Markings and signs that are illegible shall be corrected;
●Refrigerating pipe or components are installed in a position where they are unlikely to be exposed to any substance which may corrode refrigerant containing components, unless the components are constructed of materials which are inherently resistant to being corroded or are suitably protected against being so corroded.
7.Checks to electrical devices:
Repair and maintenance to electrical components shall include initial safety checks and component inspection procedures. If a fault exists that could compromise safety, then no electrical supply shall be connected to the circuit until it is satisfactorily dealt with. If the fault cannot be corrected immediately but it is necessary to continue operation, an adequate temporary solution shall be used. This shall be reported to the owner of the equipment so all parties are advised.
Initial safety checks shall include:
●That capacitors are discharged: this shall be done in a safe manner to avoid possibility of sparking;
●That no live electrical components and wiring are exposed while charging, recovering or purging the system;
●That there is continuity of earth bonding.

Repairs to Sealed Components

●During repairs to sealed components, all electrical supplies shall be disconnected from the equipment being worked upon prior to any removal of sealed covers, etc. If it is absolutely necessary to have an electrical supply to equipment during servicing, then a permanently operating form of leak detection shall be located at the most critical point to warn of a potentially hazardous situation.
●Sealed electrical components shall be replaced.

Maintenance Notice

Repair to Intrinsically Safe Components

●Do not apply any permanent inductive or capacitance loads to the circuit without ensuring that this will not exceed the permissible voltage and current permitted for the equipment in use.
●Intrinsically safe components must be replaced.
●Replace components only with parts specified by the manufacturer. Other parts may result in the ignition of refrigerant in the atmosphere from a leak.
NOTE: The use of silicon sealant can inhibit the effectiveness of some types of leak detection equipment. Intrinsically safe components do not have to be isolated prior to working on them.

Cabling

Check that cabling will not be subject to wear, corrosion, excessive pressure, vibration, sharp edges or any other adverse environmental effects. The check shall also take into account the effects of aging or continual vibration from sources such as compressors or fans.

Detection of Flammable Refrigerants

●Under no circumstances shall potential sources of ignition be used in the searching for or detection of refrigerant leaks. A halide torch (or any other detector using a naked flame) shall not be used.
●The following leak detection methods are deemed acceptable for all refrigerant systems.
●Electronic leak detectors may be used to detect refrigerant leaks but, in the case of FLAMMABLE REFRIGERANTS, the sensitivity may not be adequate, or may need re-calibration. (Detection equipment shall be calibrated in a refrigerant-free area.) Ensure that the detector is not a potential source of ignition and is suitable for the refrigerant used. Leak detection equipment shall be set at a percentage of the LFL of the refrigerant and shall be calibrated to the refrigerant employed, and the appropriate percentage of gas (25 % maximum) is confirmed.
●Leak detection fluids are also suitable for use with most refrigerants but the use of detergents containing chlorine shall be avoided as the chlorine may react with the refrigerant and corrode the copper pipe-work.
NOTE:
Examples of leak detection fluids are
– bubble method,
– fluorescent method agents.
●If a leak is suspected, all naked flames shall be removed/extinguished.
●If a leakage of refrigerant is found which requires brazing, all of the refrigerant shall be recovered from the system, or isolated (by means of shut off valves) in a part of the system remote from the leak.

Removal and Evacuation

1.When breaking into the refrigerant circuit to make repairs – or for any other purpose – conventional procedures shall be used. However, for flammable refrigerants it is important that best practice be followed, since flammability is a consideration. The following procedure shall be adhered to:
●safely remove refrigerant following local and national regulations;
●revacuate;
●purge the circuit with inert gas (optional for A2L);
●evacuate (optional for A2L);
●purge with inert gas (optional for A2L);
●continuously flush or purge with inert gas when using flame to open circuit, and open the circuit.
2.The refrigerant charge shall be recovered into the correct recovery cylinders if venting is not allowed by local and national codes. For appliances containing flammable refrigerants, the system shall be purged with oxygen-free nitrogen to render the appliance safe for flammable refrigerants. This process might need to be repeated several times. Compressed air or oxygen shall not be used for purging refrigerant systems.
3.For appliances containing flammable refrigerants, refrigerants purging shall be achieved by breaking the vacuum in the system with oxygen-free nitrogen and continuing to fill until the working pressure is achieved, then venting to atmosphere, and finally pulling down to a vacuum (optional for A2L). This process shall be repeated until no refrigerant is within the system (optional for A2L). When the final oxygen-free nitrogen charge is used, the system shall be vented down to atmospheric pressure to enable work to take place.
4.The outlet for the vacuum pump shall not be close to any potential ignition sources, and ventilation shall be available.

Charging Procedures

1.In addition to conventional charging procedures, the following requirements shall be followed.
●Ensure that contamination of different refrigerants does not occur when using charging equipment.
Hoses or lines shall be as short as possible to minimise the amount of refrigerant contained in them.
●Cylinders shall be kept in an appropriate position according to the instructions.
●Ensure that the REFRIGERATING SYSTEM is earthed prior to charging the system with refrigerant.
●Label the system when charging is complete (if not already).
●Extreme care shall be taken not to overfill the REFRIGERATING SYSTEM.
2.Prior to recharging the system, it shall be pressure-tested with the appropriate purging gas. The system shall be leak-tested on completion of charging but prior to commissioning. A follow up leak test shall be carried out prior to leaving the site.

Decommissioning

Before carrying out this procedure, it is essential that the technician is completely familiar with the equipment and all its detail. It is recommended good practice that all refrigerants are recovered safely. Prior to the task being carried out, an oil and refrigerant sample shall be taken in case analysis is required prior to re-use of recovered refrigerant. It is essential that electrical power is available before the task is commenced.
a) Become familiar with the equipment and its operation.
b) Isolate system electrically.

Maintenance Notice

Decommissioning

c) Before attempting the procedure, ensure that:
●mechanical handling equipment is available, if required, for handling refrigerant cylinders;
●all personal protective equipment is available and being used correctly;
●the recovery process is supervised at all times by a competent person;
●recovery equipment and cylinders conform to the appropriate standards.
d) Pump down refrigerant system, if possible.
e) If a vacuum is not possible, make a manifold so that refrigerant can be removed from various parts of the system.
f) Make sure that cylinder is situated on the scales before recovery takes place.
g) Start the recovery machine and operate in accordance with instructions.
h) Do not overfill cylinders (no more than 80 % volume liquid charge).
i) Do not exceed the maximum working pressure of the cylinder, even temporarily.
j) When the cylinders have been filled correctly and the process completed, make sure that the cylinders and the equipment are removed from site promptly and all isolation valves on the equipment are closed off.
k) Recovered refrigerant shall not be charged into another REFRIGERATING SYSTEM unless it has been cleaned and checked.

Labelling

Equipment shall be labelled stating that it has been de-commissioned and emptied of refrigerant. The label shall be dated and signed. For appliances containing FLAMMABLE REFRIGERANTS, ensure that there are labels on the equipment stating the equipment contains FLAMMABLE REFRIGERANT.

Recovery

1.When removing refrigerant from a system, either for servicing or decommissioning, it is recommended good practice that all refrigerants are removed safely.
2.When transferring refrigerant into cylinders, ensure that only appropriate refrigerant recovery cylinders are employed. Ensure that the correct number of cylinders for holding the total system charge is available. All cylinders to be used are designated for the recovered refrigerant and labelled for that refrigerant (i.e. special cylinders for the recovery of refrigerant). Cylinders shall be complete with pressure-relief valve and associated shut-off valves in good working order. Empty recovery cylinders are evacuated and, if possible, cooled before recovery occurs.
3.The recovery equipment shall be in good working order with a set of instructions concerning the equipment that is at hand and shall be suitable for the recovery of the flammable refrigerant. If in doubt, the manufacturer should be consulted. In addition, a set of calibrated weighing scales shall be available and in good working order. Hoses shall be complete with leak-free disconnect couplings and in good condition.
4.The recovered refrigerant shall be processed according to local legislation in the correct recovery cylinder, and the relevant waste transfer note arranged. Do not mix refrigerants in recovery units and especially not in cylinders.
5.If compressors or compressor oils are to be removed, ensure that they have been evacuated to an acceptable level to make certain that flammable refrigerant does not remain within the lubricant. The compressor body shall not be heated by an open flame or other ignition sources to accelerate this process. When oil is drained from a system, it shall be carried out safely.

DE-COMMISSIONING,DISMANTLING&DISPOSAL

This product contains refrigerant under pressure, rotating parts, and electrical connections which may be a danger & cause injury. All work must only be carried out by competent persons using suitable protective clothing and safety precautions.

Read the Manual

Risk of Electric Shock

RoHS

Unit is Remotely controlled
& may start without warning

1. Isolate all sources of electrical supply to the unit including any control system supplies switched by the unit.
   Ensure that all points of electrical and gas isolation are secured in the OFF position.
   The supply cables and gas pipe work may then be disconnected and removed.
   For points of connection refer to unit installation instructions.
2. Remove all refrigerant from each system of the unit into a suitable container using a refrigerant reclaim or recovery unit.
   This refrigerant may then be reused, if appropriate, or returned to the manufacturer for disposal.
   Under no circumstances should refrigerant be vented to atmosphere Where appropriate, drain the refrigerant oil from each system into a suitable container and dispose of according to local laws and regulations governing disposal of oily wastes.
3. Packaged units can generally be removed in one piece after disconnection as above.
   Any fixing down bolts should be removed and then unit lifted from position using the points provided and equipment of adequate lifting capacity.
   Reference MUST be made to the unit installation instructions for unit weight and correct methods of lifting.
   Note that any residual or spilt refrigerant oil should be mopped up and disposed of as described above.
4. After removal from position the unit parts may be disposed of according to local laws and regulations.
5. Meaning of crossed Out wheeled dustbin: Do not dispose of electrical appliances as unsorted municipal waste, use separate collection facilities.
   Contact your local government for information regarding the collection systems available. If electrical appliances are disposed of in landfills or dumps, hazardous substances can leak into the groundwater and get into the food chain, damaging your health and well being. When replacing old appliances with new ones, the retailer is legally obligated to take back your old appliance for disposals at least free of charge.

MADE IN CHINA

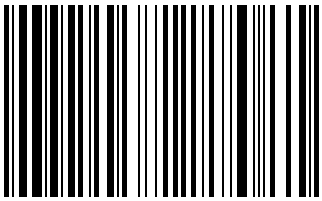

16437005000785